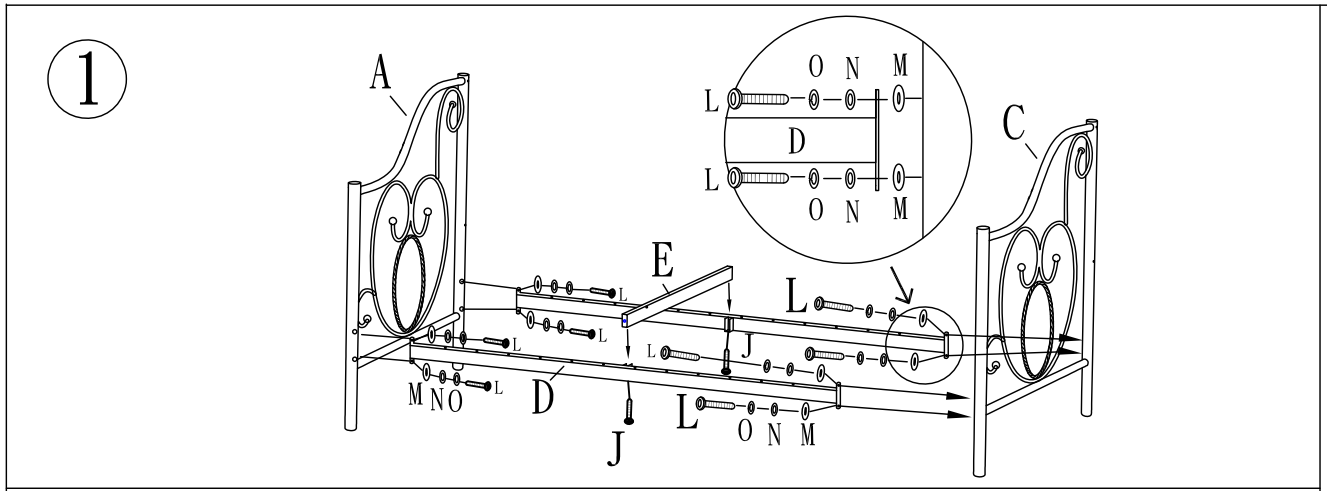
1
A
C
E
L
D
J
M N O
O N M

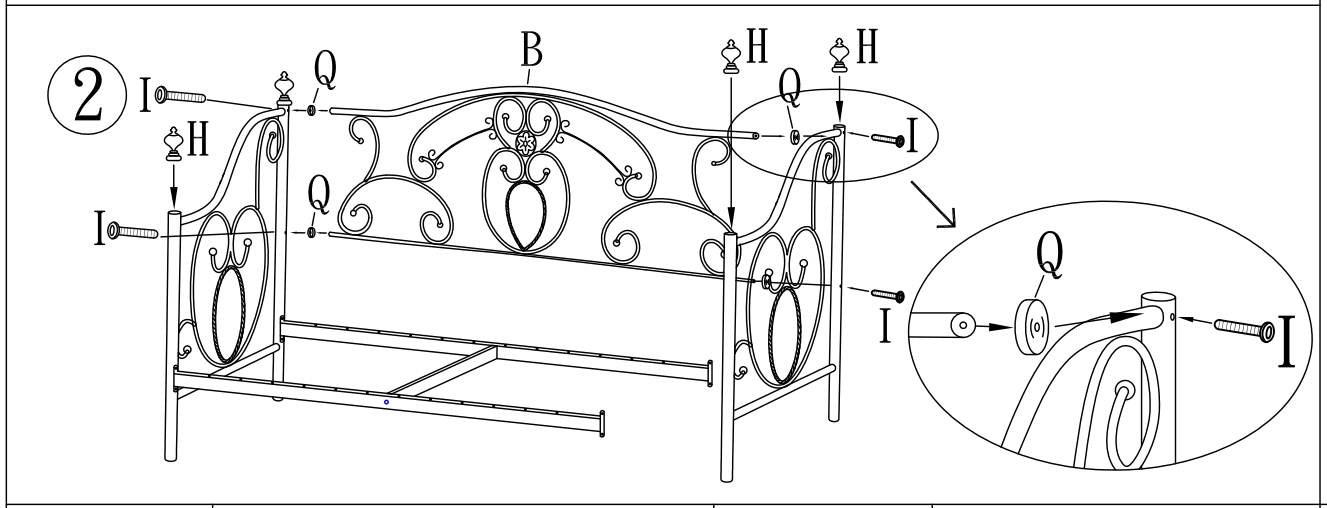
2
I
H
Q
B
H
H
Q
I
Q
I
Q
I
I

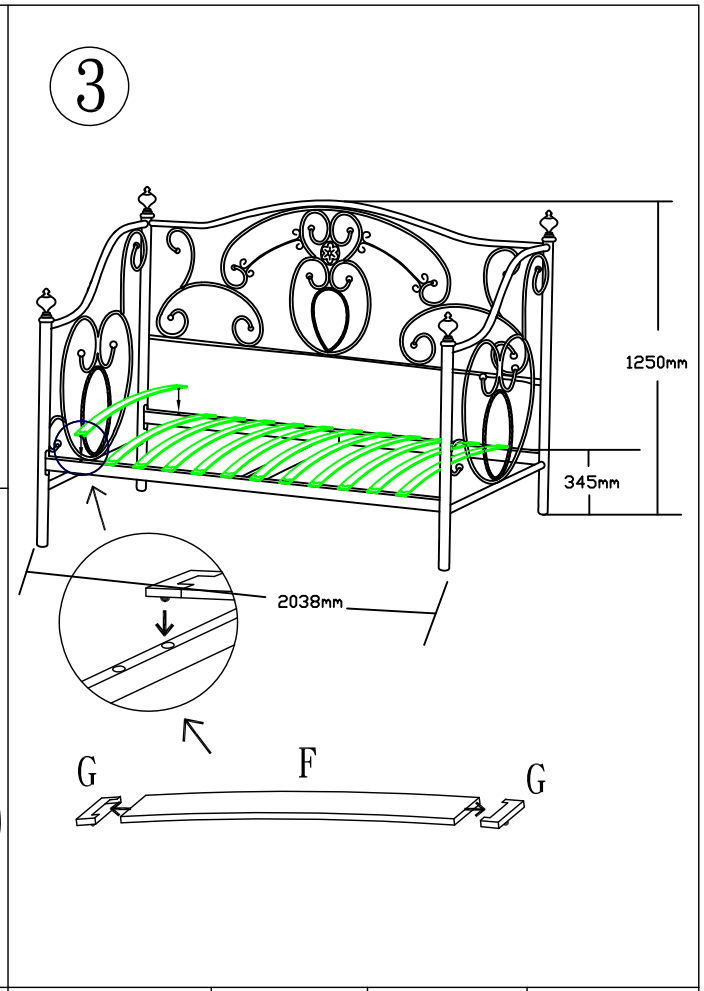
3
1250mm
345mm
2038mm
G
F
G

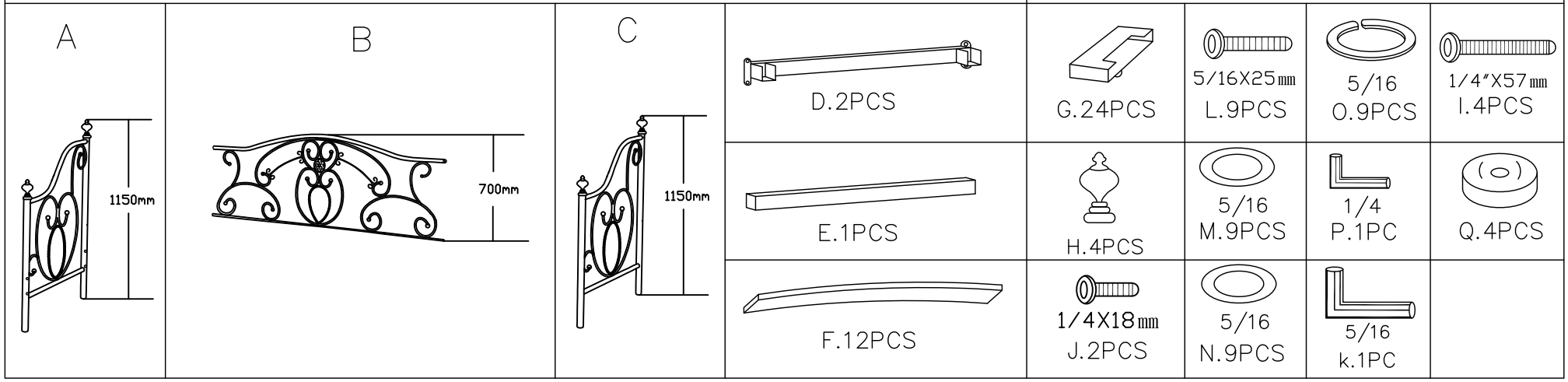
A
1150mm
B
700mm
C
1150mm
D.2PCS
E.1PCS
F.12PCS
G.24PCS
5/16X25mm
L.9PCS
5/16
O.9PCS
1/4"X57mm
I.4PCS
H.4PCS
5/16
M.9PCS
1/4
P.1PC
Q.4PCS
1/4X18mm
J.2PCS
5/16
N.9PCS
5/16
k.1PC